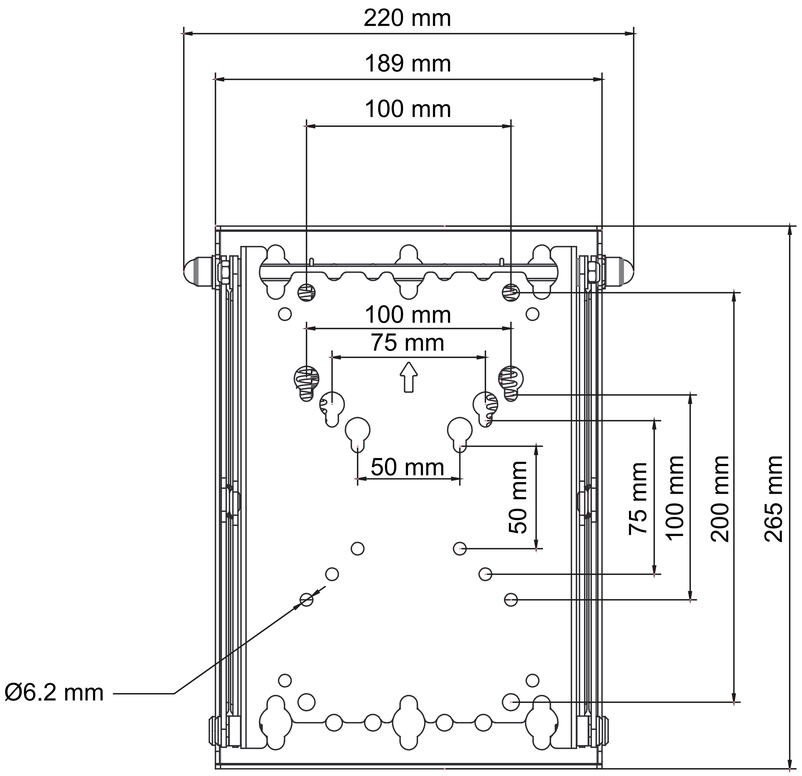
220 mm
189 mm
100 mm
100 mm
75 mm
50 mm
50 mm
75 mm
100 mm
200 mm
265 mm
Ø6.2 mm

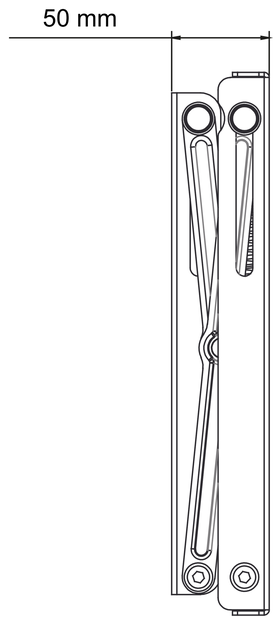
50 mm

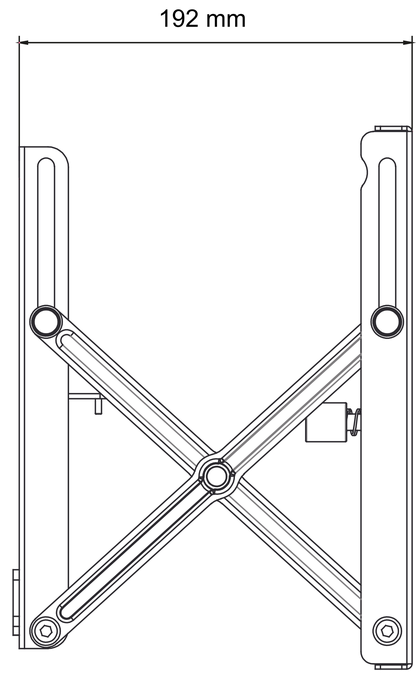
192 mm

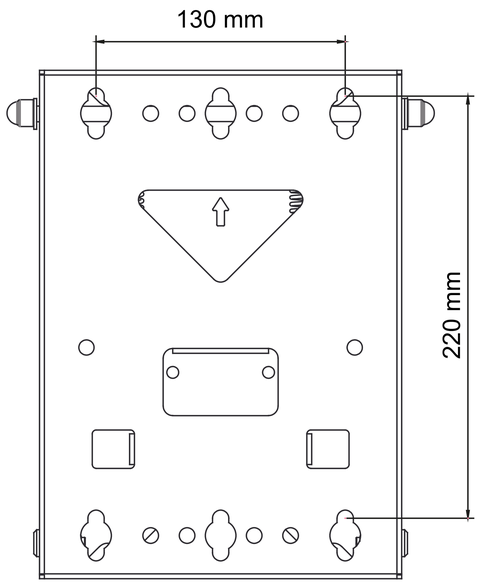
130 mm
220 mm

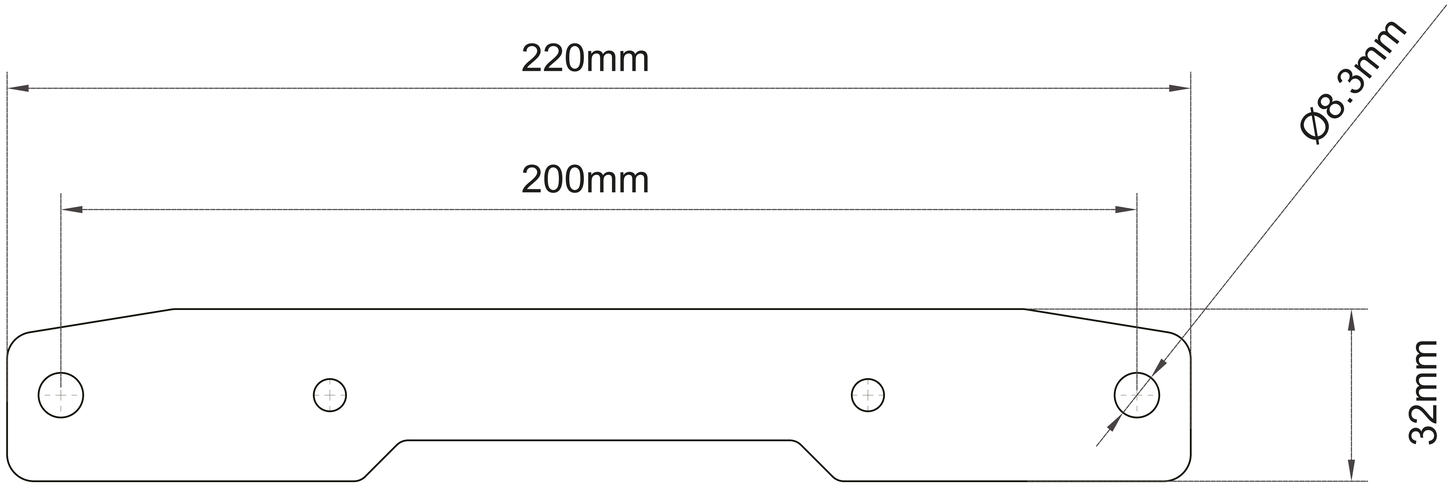
220mm
200mm
Ø8.3mm
32mm

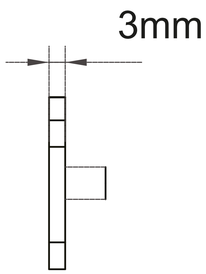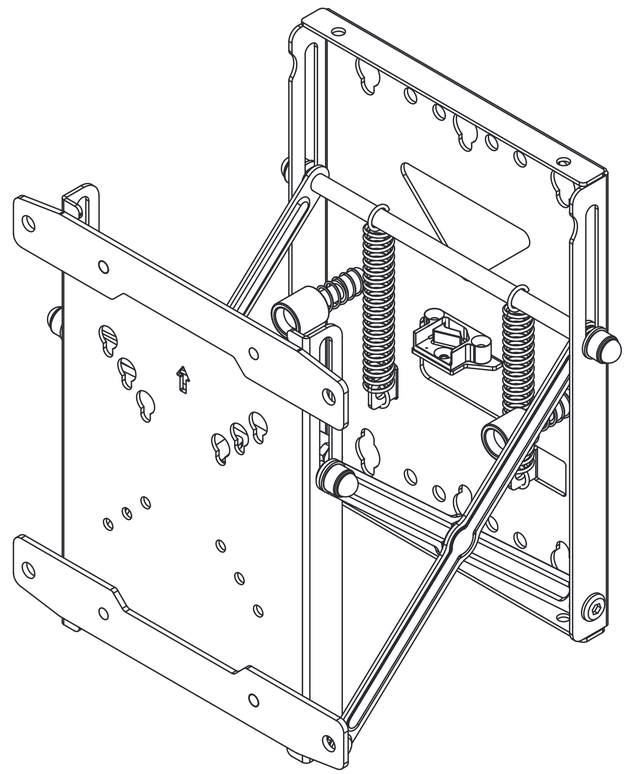
3mm