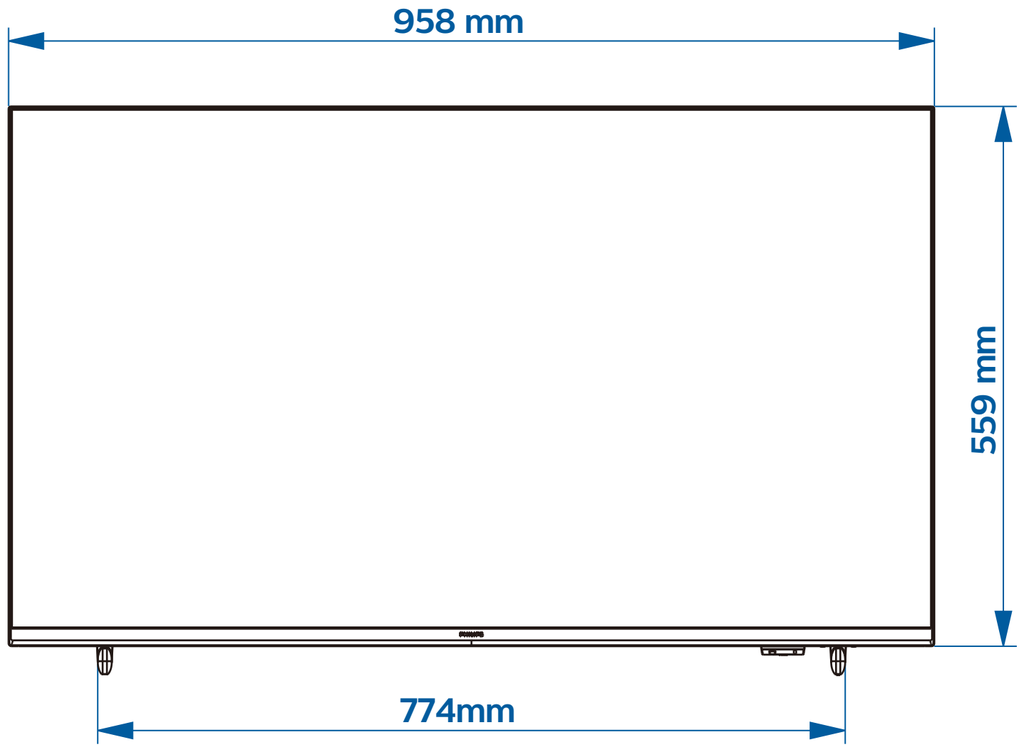
958 mm
559 mm
774mm

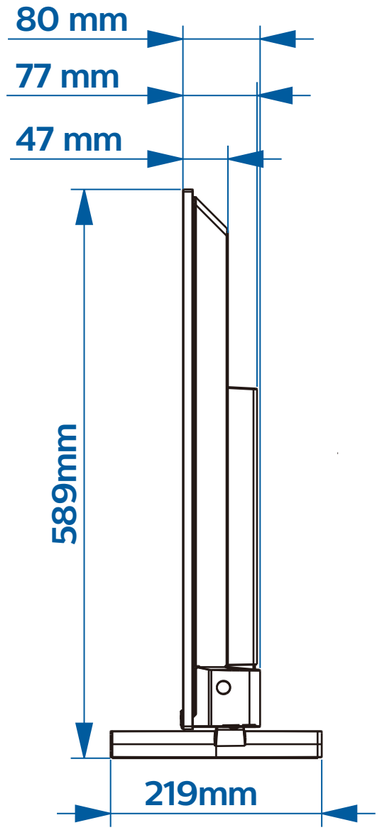
80 mm
77 mm
47 mm
589mm
219mm

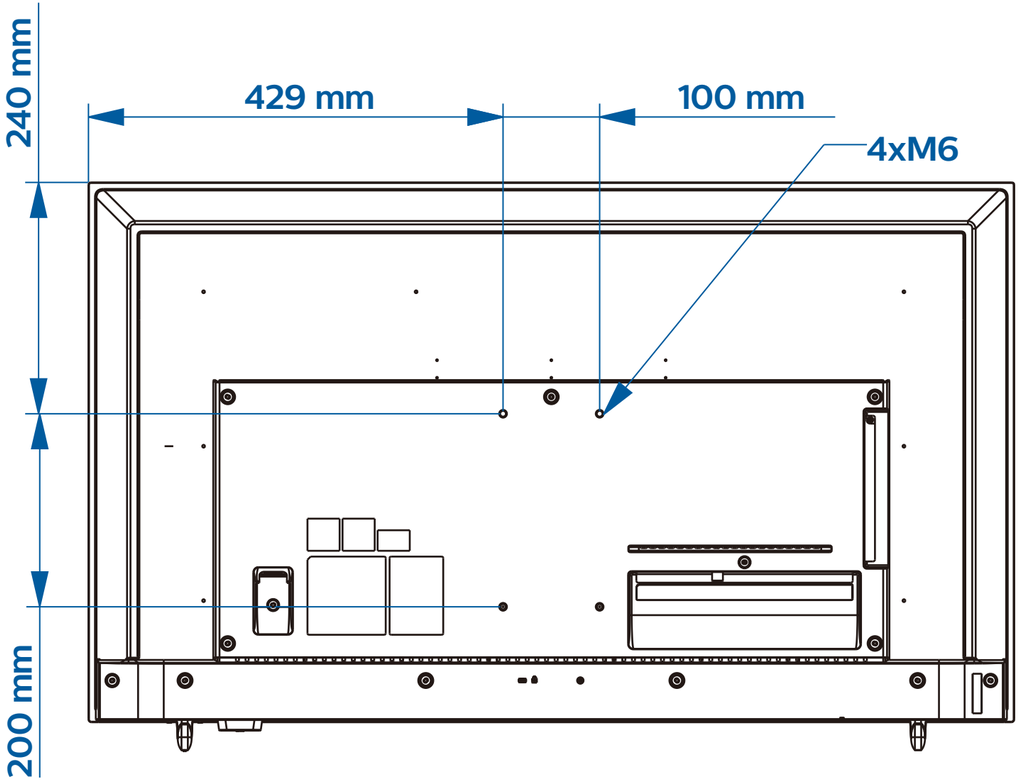
240 mm
429 mm
100 mm
4xM6
200 mm