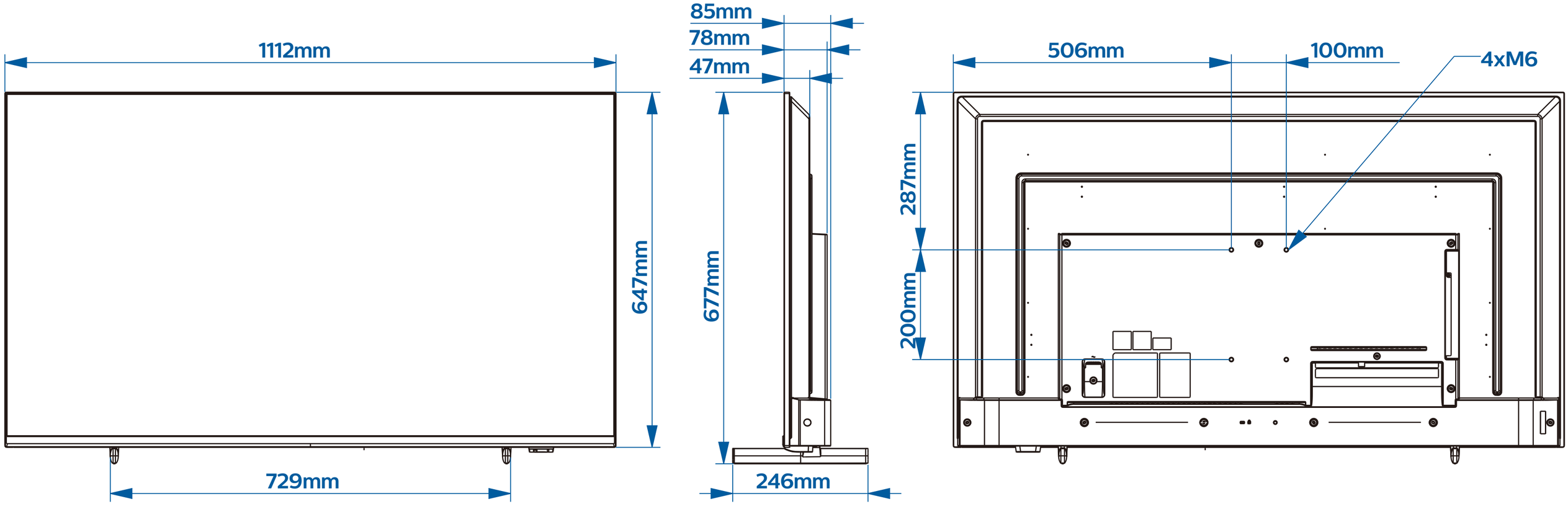
1112mm
647mm
729mm
85mm
78mm
47mm
677mm
246mm
506mm
100mm
4xM6
287mm
200mm