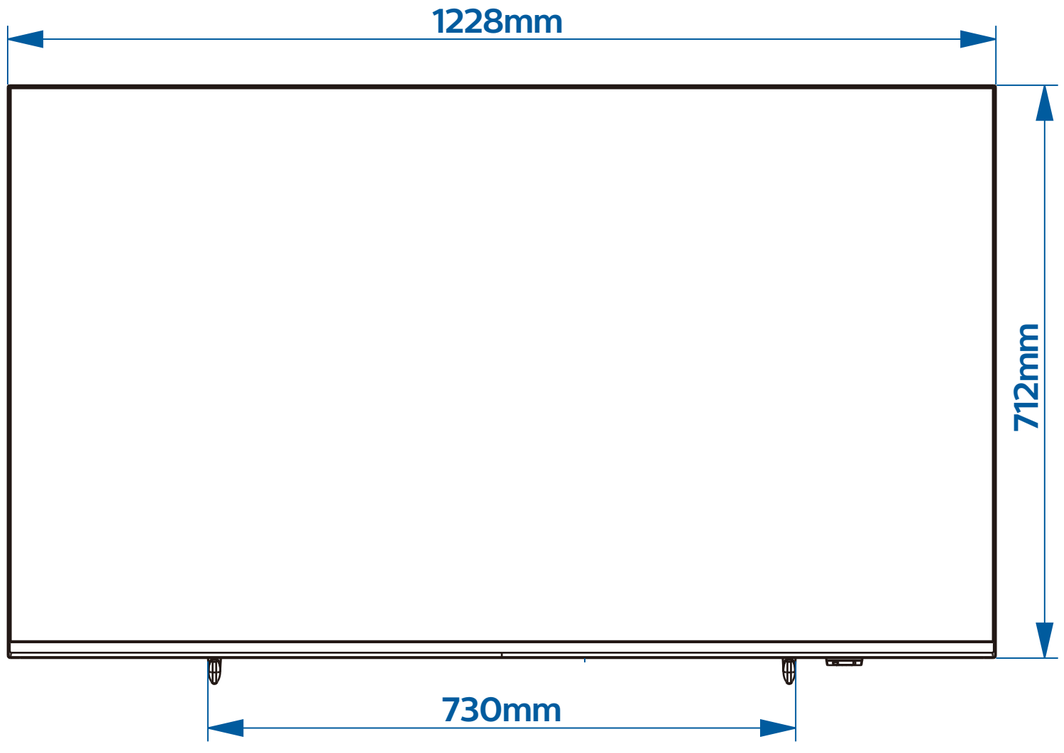
1228mm
712mm
730mm

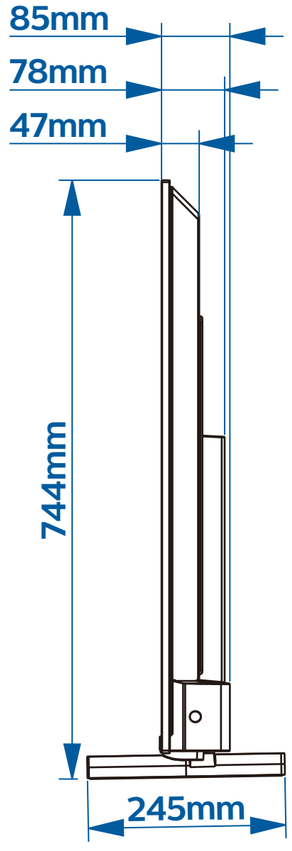
85mm
78mm
47mm
744mm
245mm

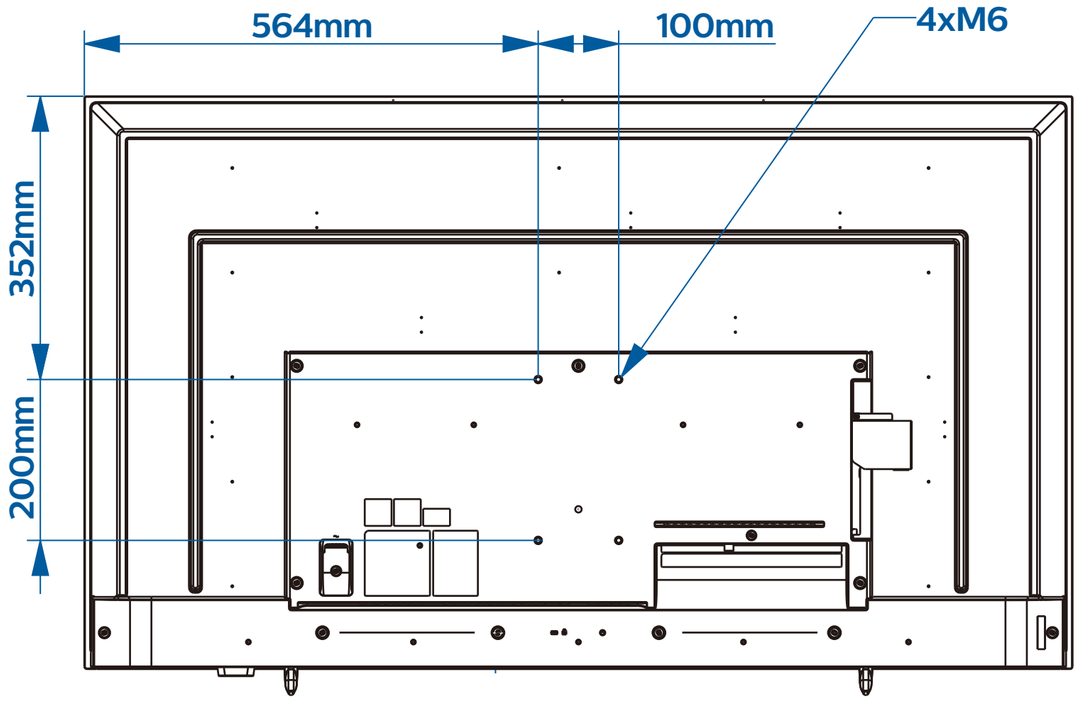
564mm
100mm
4xM6
352mm
200mm