Philips 65BDL6051C
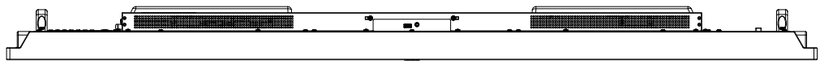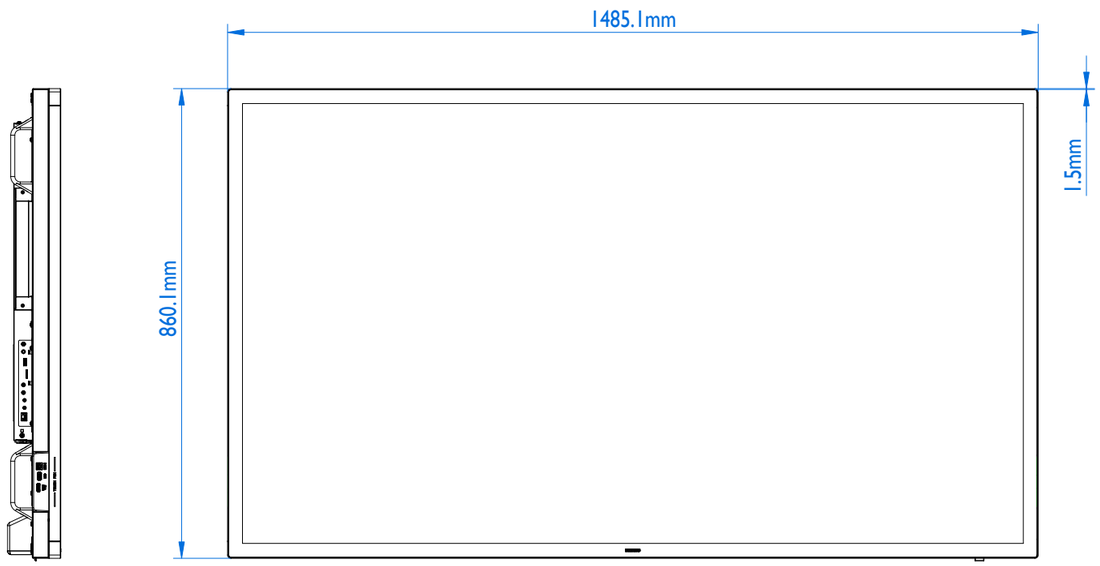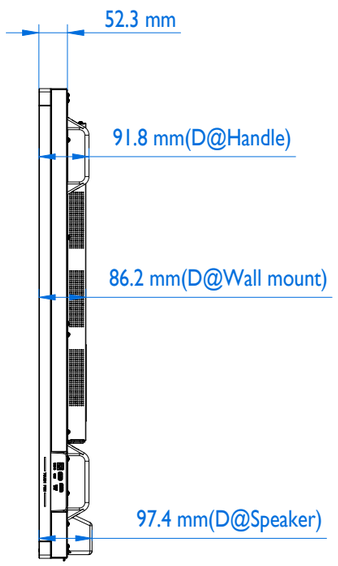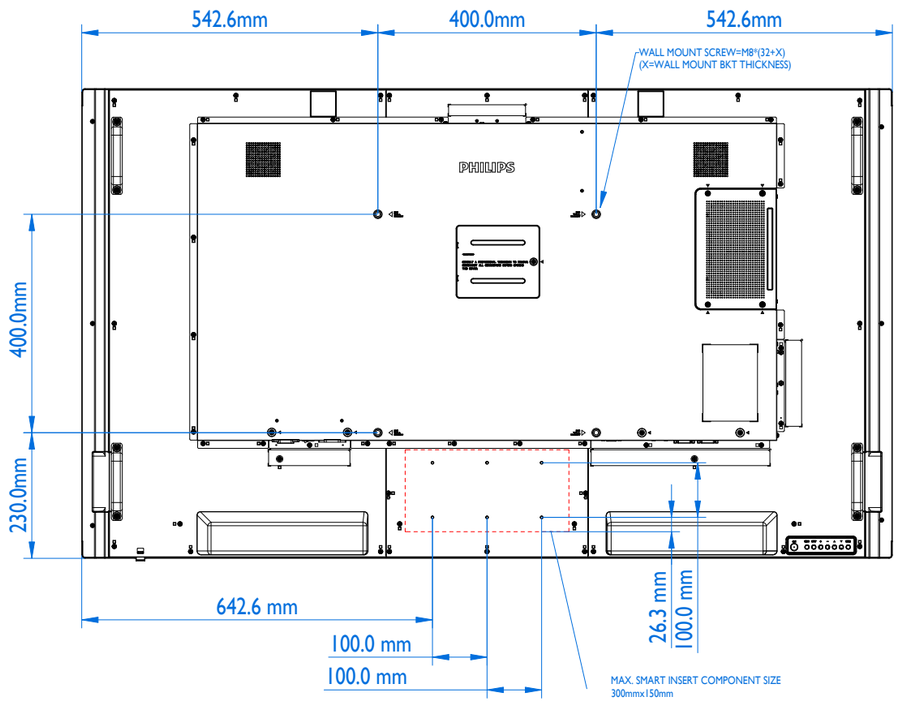
Version: 1.0
Release Date: 2020/08/14