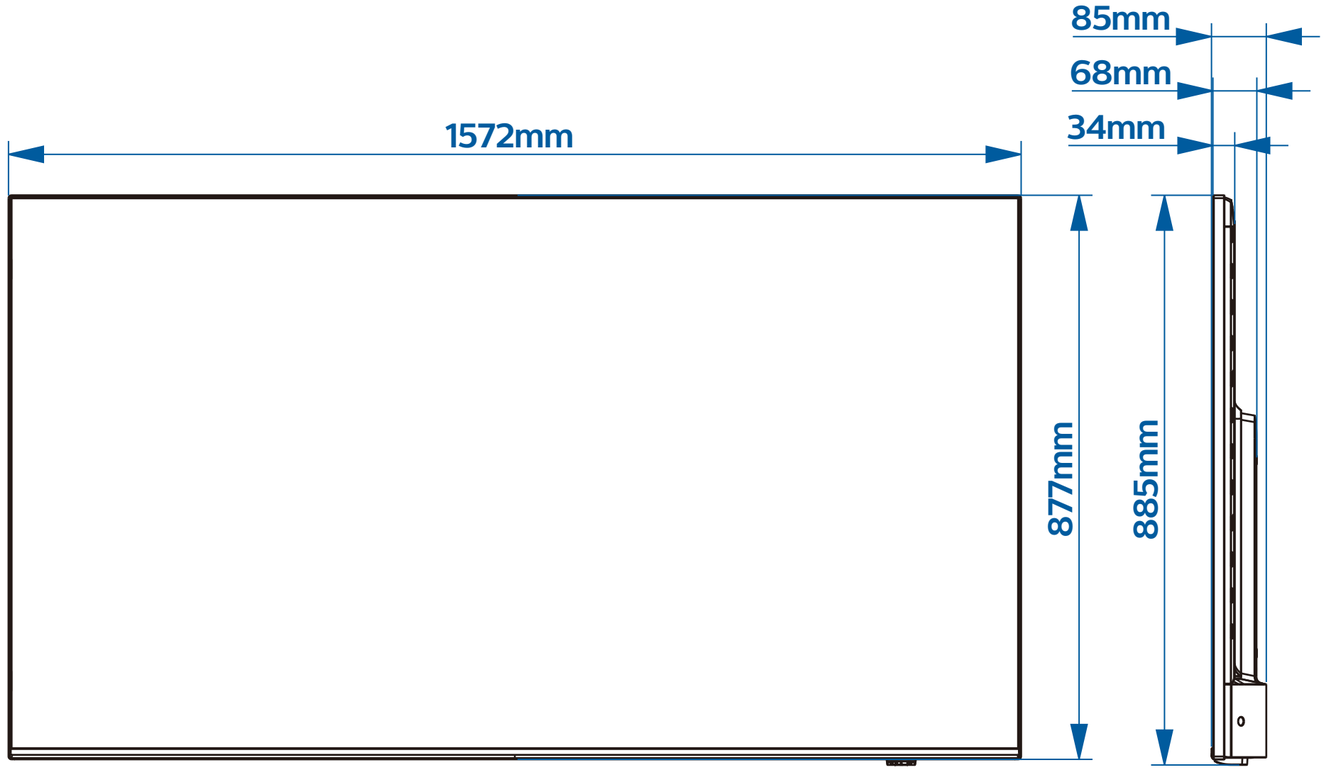
85mm
68mm
34mm
1572mm
877mm
885mm

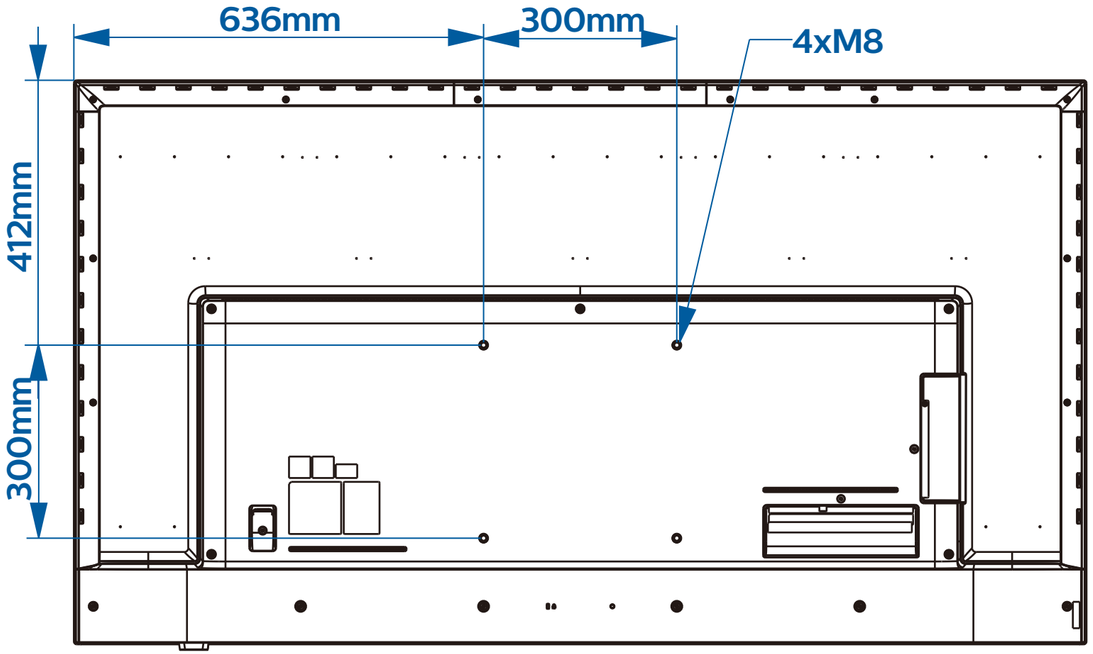
636mm
300mm
4xM8
412mm
300mm